Kytola INSTRUMENTS

FLOW METER

Model **TL**

Model TL variable area flow meter is designed for measuring and monitoring of large liquid and gas flows.

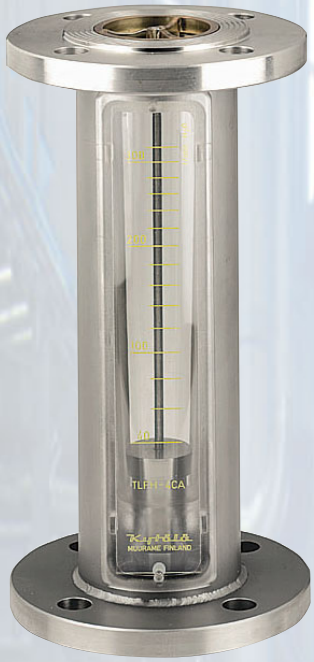

Model TLFH

Model TL

FEATURES

- Sturdy construction
- Protected flow tube
- Threaded or flanged connections

TYPICAL APPLICATIONS

- Sealing water measurement for vacuum pumps
- Lubrication oil measurement for gear boxes
- Flush water applications
- Gas flow measurements
- Power plants

OPTIONS

- Scale for alternative liquids and gases
- Low and/or high flow alarm
- PES flow tube
- Viton® or EPDM seals
- Back light

ISO 9001 DNV CERTIFICATED FIRM

*) Special construction on request

Technical data TL

Model	TLA -	TLH -	TLFH -
Connections	BSP 2" / NPT 2"	BSP 2" / NPT 2"	DN 50 / ANSI 2"
Max. pressure	20 bar	20 bar	16 bar
Max. temperature	80 °C (*120 °C)	80 °C (*120 °C)	80 °C (*120 °C)
Weight	3.3 kg	4.5 kg	6.6 kg
Connectors	Aluminium	AISI 316	AISI 316
Body	AISI 316		
Flowtube	Grilamid (PA-12) (*PES)		
Float	AISI 329 or PTFE (depending on range)		
Seals	Nitrile (*Viton®, EPDM)		
Accuracy	±5% F.S. (H_2O, +20 °C)		

TL [ ] - [ ] [ ] - [ ]

	Special feature
N	NPT or ANSI connections
V	PES flowtube
W	PES flowtube, Viton® -seals
X	Viton® -seals

	Scale
A	H_2O (l/min) at +20°C
S	Air (Nm^3/min) at +20°C / 101,3 kPa

	Flow range	
	H_2O	**Air**
4E*	7,5 - 55 l/min	0,3 - 1,9 Nm^3/min
4A	10 - 105 l/min	0,4 - 3,0 Nm^3/min
4F	10 - 150 l/min	0,5 - 4,25 Nm^3/min
4B	20 - 200 l/min	0,5 - 6,0 Nm^3/min
4C	40 - 320 l/min	1 - 10 Nm^3/min
4D	50 - 400 l/min	1 - 12 Nm^3/min

	Connections	Material
A	BSP 2"	Aluminium
H	BSP 2"	AISI 316
FH	DN 50 flanges	AISI 316

* PTFE float, Flow alarm not available

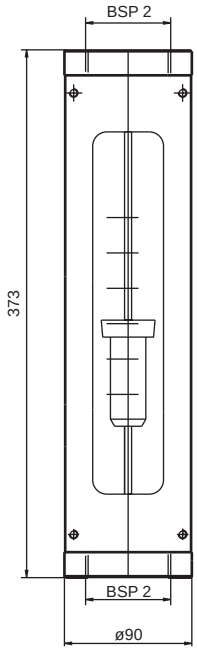

Model TL

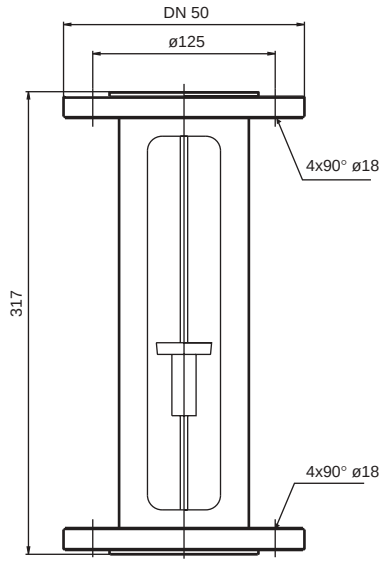

Model TLFH

MANUFACTURER

KYTOLA OY • Olli Kytolan tie 1
P.O. Box 5 • FI-40951 MUURAME • FINLAND
Phone +358 207 7906 90 • Fax +358 14 631 419
E-mail sales@kytola.com • www.kytola.com

LOCAL REPRESENTATIVE